SECTION 5. TRANSMISSION LINE WASHING REQUIREMENTS AND TECHNIQUES

5.1 General 5-1
5.2 Water 5-2
5.3 Washing Precautions 5-3
5.4 Washing Preparations 5-3
5.5 Washing Techniques 5-4
5.6 Washing Techniques for Insulator Types 5-5
5.6.1 Suspension Insulator Washing (Vertical) 5-5
5.6.2 Dead-End Insulator Washing (Horizontal) 5-6
5.6.3 Combination Dead-End and Jumper-Support Insulator Washing 5-7
5.6.4 "V" String Insulator Washing 5-8
5.6.5 Post-Type Insulator Washing 5-9
5.6.6 Pin-Type Insulator Washing 5-10
5.7 Washing Near or Inside a Substation 5-10
5.8 Distribution Under-built Washing 5-11
5.9 Polymer Insulators 5-12
5.10 Silicone Coating 5-13
5.11 Aerial Lift Truck 5-13
5.11.1 Positioning for Wood Pole Lines 5-13
5.12 Aerial Wash Truck (Production Washer) 5-14
5.12.1 Requirements for Using the Production Washer 5-15
5.12.2 Production Washer Set-Up 5-15
5.12.3 Production Washer Positioning 5-16
5.12.4 Boom and Nozzle Operations 5-17
5.12.5 Scheduling the Production Washer Between Areas 5-19
5.13 Climbing Wash Techniques 5-21
5.13.1 Steel Structure Rigging and Procedures 5-21
A. 115 kV and 230 kV Structures 5-21
B. 500 kV Structures 5-22
5.13.2 Wood Structure Rigging and Procedures 5-22
5.14 Dry Cleaning Techniques 5-22

©PG&E revised January 2015

SECTION 5. TRANSMISSION LINE WASHING REQUIREMENTS AND TECHNIQUES

5.1 GENERAL

This section provides guidance, practices, and procedures to safely and effectively clean energized and de-energized transmission line insulators. Transmission voltages are 60 kV and above.

Transmission facilities that are washed using the procedures outlined in this manual may be considered as having been patrolled in accordance with the requirements of ***Transmission & Distribution (TD) Manual TD-1001M, "Electric Transmission Preventative Maintenance Manual (ETPM)."*** To meet the inspection requirements, a qualified Company representative must look for any abnormal conditions as specified in the standard. Retain any records and documentation of facilities washed and/or patrolled and any abnormal conditions.

Transmission structures with transmission and distribution facilities requires both facilities to be washed at the same time. The respective transmission and distribution representatives need to establish responsibility for washing distribution facilities on these structures.

5.2 WATER

A. Use **only** water that is clean and free of salts and minerals. See **Section 2.6, Water Testing.**

⚠WARNING

Never use seawater, bay water or salt water of any kind to wash insulators.

B. Use water with a minimum pressure of 400 pounds-per-square-inch gauge (psig) at the nozzle.

C. When washing insulators on transmission lines, use only water that meets the minimum resistance requirements in Table 5.2.1.

D. Maintain the minimum stream-length distance between the nozzle and the insulator for the transmission voltage level being washed, as shown in Table 5.2.1. This applies to washing any energized parts and supporting insulators.

⚠WARNING

The water stream distance between the nozzle and the insulator should never be less than the minimum stream-length distance specified in Table 5.2.1.

Table 5.2.1. Minimum Stream-Length Distance, Water Resistance, and Nozzle Pressure for 1/4-Inch Nozzles.

Voltage (phase-to-phase)	Minimum Stream-Length Distance (feet)	Minimum Water Resistance (ohms-per-inch-cubed)	Minimum Nozzle Pressure (psig)
4 kV – 34.5 kV	8	550	400
34.5 kV – 69 kV	12	550	400
69.5 kV – 115 kV	13	550	400
230 kV	12	20,000	400
230 kV	15	550	400
500 kV	14	50,000	800
500 kV	20	3,000	550

NOTE: **Do not use these stream-length distances when washing insulators from a helicopter. (See Section 7, Helicopter Washing Techniques.)**

©PG&E revised January 2015

E. To achieve maximum cleaning effect, position the nozzle to wash at the most effective washing distance. If the distance is too great, the washing action becomes less effective.

5.3 WASHING PRECAUTIONS

A. Direct the water stream to avoid jumpers and equipment, which can be dislodged, damaged, or cause damage due to the impact of the stream.

B. When washing contaminants from a selected area on insulators, do not wet the unwashed contaminated areas. Water stream overspray caused by wind or stream deflection can cause contaminated insulators to flash-over. First, wash to remove the contaminants. Then, rinse to ensure that any run-off contaminants that did not wash free are completely removed.

⚠ WARNING

Do not allow any water overspray, either deflected and/or wind-drifted to moisten unwashed, contaminated insulators.

5.4 WASHING PREPARATIONS

A. Inspect the insulators, structures, equipment, and related hardware for any damage, tracking, burning, or deterioration before washing. This visual inspection can prevent unnecessary flashovers. Document any abnormal conditions, as needed, and correct any problems before washing.

B. At any structure that has an unusual or challenging configuration, environmental concerns, terrain issues, etc., consider performing a tailboard at that specific location before proceeding with the wash.

C. Before washing, position the nozzle below all conductor levels and direct a short burst of water away from the unwashed insulators. Observe the spray drift and wind direction and flush any heated water out of the pump system.

D. A typical crew for washing transmission lines with lift equipment consists of a nozzle operator, washing from the basket, and an operator for the wash vehicle. At times, it may be necessary for the field supervisor to add more employees to the crew to ensure public safety, especially when maneuvering equipment or notifying the public to close vehicle windows, etc.

5.5 WASHING TECHNIQUES

A. When washing an insulator or string of insulators, start the stream of water in the air near the starting point on the insulator to be washed. Bring the water stream up to the required nozzle pressure before directing the water toward the insulator. Direct the water stream at the insulator or skirt and keep it on until washing is completed.

B. Keep the water stream on until washing is completed. Keep the stream directed at the insulator or skirt and move the stream away from the insulator surface and conductor before shutting down the water stream.

C. In order to be effective, the water stream should create a swirling action and a ringing sound inside the skirt surfaces. If possible, direct the stream at a 30° to 45° angle upward toward the insulators.

D. For vertical or multilevel structures, wash the lower-phase insulators first.

E. Wash the individual insulator units (bells) one unit at a time. The time necessary to complete this task will vary depending on the contamination, but the heaviest contamination can be normally removed in about two seconds. Develop a method for determining short time intervals (in seconds) to ensure that the washing action is effective. One method for timing seconds is to slowly count "one thousand one, one thousand two", etc.

F. If possible, in windy conditions, first wash with the wind by positioning the nozzle **upwind** of the insulator and keeping the water stream in line with the wind direction.

G. If possible, and if wind conditions permit, first wash the insulator side with the most contamination. Contamination is generally heaviest on the prevailing downwind side.

H. When washing:

- ***Suspension "I"*** or ***"V" string insulators*** in a vertical or diagonal configuration, direct the water stream to the insulator closest to the conductor and work progressively upward, occasionally returning the water stream to the lower units to rinse off any run-off contaminants.
- ***Dead-end strings, horizontal suspension strings*** and ***horizontal post-type insulators,*** direct the water stream to the downwind end and progressively work toward the upwind end, occasionally returning to the section just washed to remove any splashed-back contamination. Under no-wind conditions, start washing at the conductor end of the insulator.
- ***Vertical-mounted insulators*** of all types, "wash up" and "rinse down" in stages, depending on the voltage, to ensure the contaminants are effectively removed from the lower sections before washing all the way to the top of the insulator.
- On ***wood pole structures*** with wooden crossarms, avoid wetting the crossarms, if possible. Wetting the crossarms can increase leakage current and result in fires. Direct the water steam to the arm if burning starts.

©PG&E revised January 2015

I. Leakage current discharges, arcing, or tracking can extend from the metal cap to the porcelain on an insulator that is being washed and can be heard for a few seconds after washing is completed. If this condition continues, rewash the insulators.

J. If unusual arcing occurs while washing, direct the water stream into the arc. The water usually extinguishes the arc before the line relays.

K. Do not wash insulators that are cracked, broken, or arcing excessively. Replace them as soon as practical.

5.6 WASHING TECHNIQUES FOR INSULATOR TYPES

The washing techniques for different types of insulators are outlined below.

5.6.1 SUSPENSION INSULATOR WASHING (VERTICAL)

A. Wash a single suspension string of insulators by first directing the water stream, at a 30° to 40° angle from below the insulators, toward the bottom insulator (bell). Then, wash the string upward. If there is little or no arcing in excess of the normal corona once washing commences, wash the string one unit at a time. Move the wash stream up the string until all of it is washed. Then, rinse the string from the top back down to the conductor level. If the start of washing causes arcing or if there is arcing before washing, wash and rinse only the first four to six insulators. Repeat this wash and rinse procedure upward until the entire string has been washed. Finally, rinse the entire string to ensure that all run-off contaminants are removed.

B. Wash the double insulator strings one unit at a time, similarly to a single suspension string, except wash the strings alternately and evenly upward on both strings.

C. If the four-to-six-unit wash cycle is required due to excessive arcing, wash evenly on both insulator strings until they are clean. Rinse both strings together and evenly from the tower to remove all run-off contamination. See Figure 5.6.1.

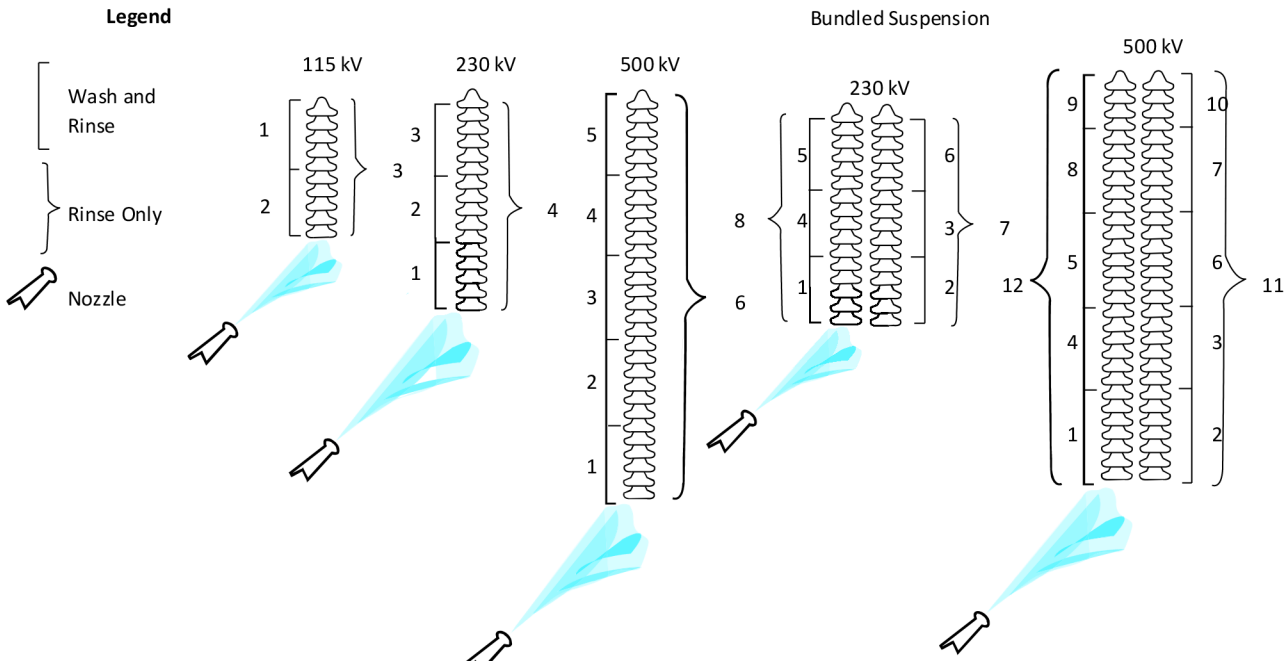

Figure 5.6.1. Washing and Rinsing Sequence for Vertical Insulators.

5.6.2 DEAD-END INSULATOR WASHING (HORIZONTAL)

A. Wash a single string of dead-end insulator units by first directing the water stream to the downwind end of the lowest downwind string on the structure. If there is little or no arcing once washing commences, wash the string one unit at a time in the upwind direction until the entire string is washed. Then, rinse the string from the upwind end back to the starting point.

B. If the wind direction is directly in line with the conductor and an effective nozzle position is attained, continue washing from the downwind string across the arm to the upwind string on the same phase. Then, completely wash both strings back to the starting point.

C. Under no-wind conditions, start washing at the conductor end of each dead-end string of insulators.

D. If arcing occurs before or after the start of washing, only wash and rinse the first four to six insulators on the downwind end. Continue this four-to-six-unit cycle in the upwind direction until the entire string has been washed. Then, rinse back to the starting point to remove all run-off contamination.

E. Bundled dead-end insulator strings have a single dead-end string for each subconductor. Wash these double strings one unit at a time, similarly to the single dead-end strings, except alternate between the strings. To avoid conditions that cause significant arcing, always use the four-to-six-unit cycle on bundled dead-end

©PG&E revised January 2015

insulators. Starting on the lowest-phase, most-downwind insulators, direct the water stream at four to six units in the upwind direction on each string. Direct the water stream evenly between the strings until both are washed. Then, reverse this sequence back to the starting point to rinse the insulators. (See Figure 5.6.2.)

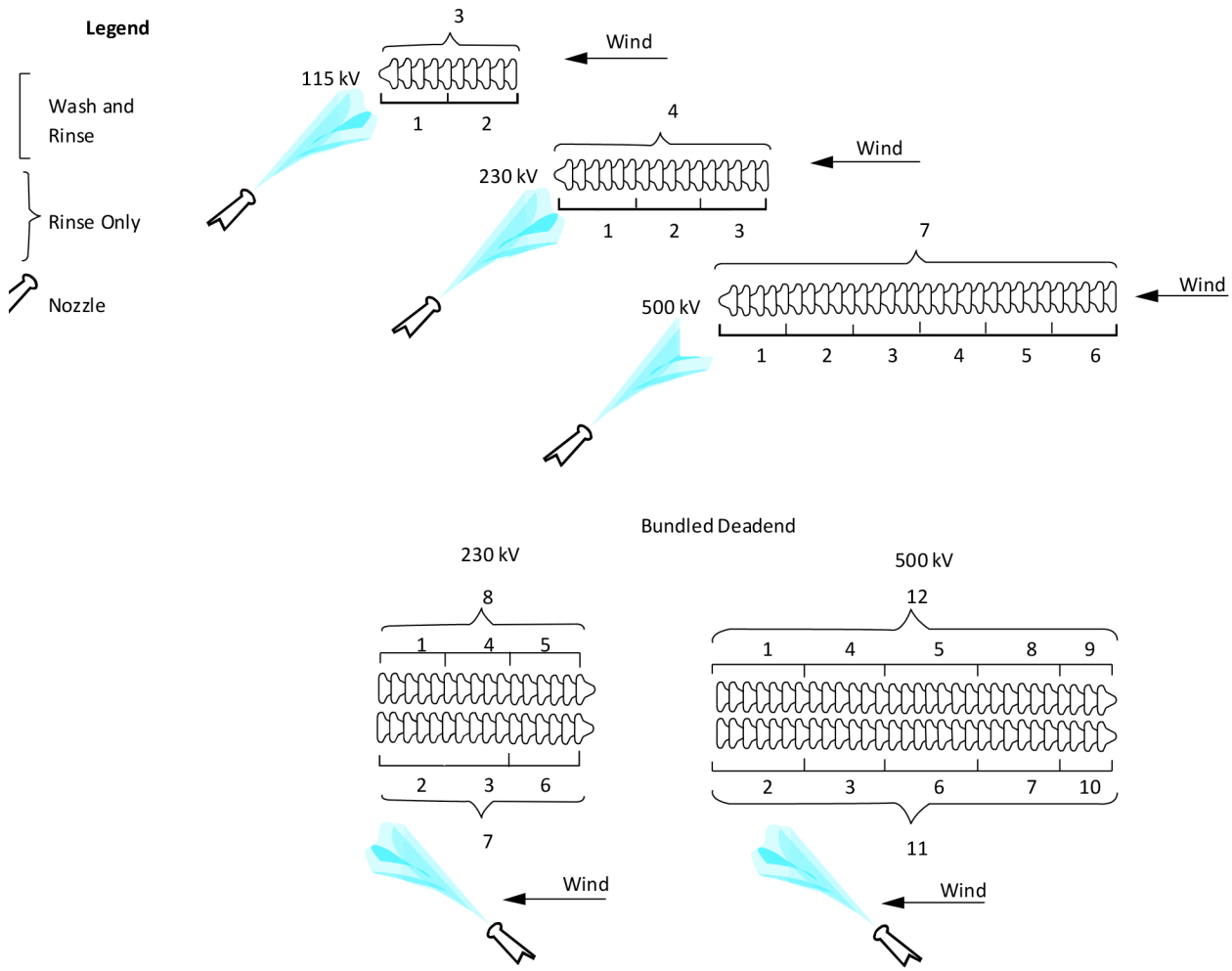

Figure 5.6.2. Washing and Rinsing Sequence for Horizontal Insulators.

5.6.3 COMBINATION DEAD-END AND JUMPER-SUPPORT INSULATOR WASHING

A. Under normal wind conditions, first wash and rinse the most downwind dead-end insulator string. Wash and rinse the entire jumper-support string and complete that phase by washing the upwind, dead-end string and quick-rinsing all three strings.

B. With no-wind conditions, wash and rinse four to six insulators at a time, half-way up each string on the phase, starting at the conductor end of each. This provides enough

clean insulation to finish washing each string without allowing the overspray to wet the contaminants on the adjacent strings. Position the nozzle in line with the jumper, not perpendicular to it, to prevent the jumper and insulator string from swinging excessively.

5.6.4 "V" STRING INSULATOR WASHING

A. "V" string insulator configurations are used on the middle phase of 500 kV suspension towers and on all phases of heavy, bundled 230 kV and 115 kV suspension towers.

B. Wash the "V" strings in the same manner as the bundled, suspension insulator strings described in Section 5.6.1. Alternate washing the two strings four to six insulator units at a time, from the conductor toward the tower until approximately one-half of each string is washed and rinsed. Then, wash the most downwind insulator string of the "V."

C. After completely washing the upwind string, rinse both strings of the "V." Apply this technique **only** when using the aerial wash truck (production washer) or helicopter for the center phase "V" string of a 500 kV structure. If the 500 kV structure must be climbed for washing or if contamination is heavy, use two nozzles simultaneously to wash each string of the "V." (See Figure 5.6.4.)

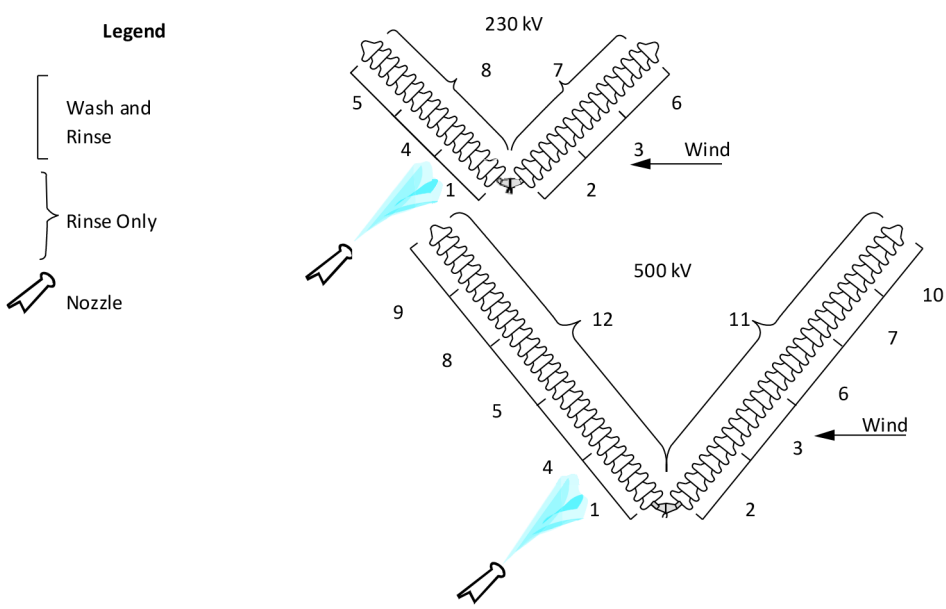

Figure 5.6.4. Washing and Rinsing Sequence for "V" String Insulators.

©PG&E revised January 2015

5.6.5 POST-TYPE INSULATOR WASHING

A. Wash horizontal, post-type insulators from an upwind position. First, direct the water stream at the downwind end of the lowest downwind insulator on the structure and wash toward the upwind end of the post insulator until each skirt is clean. Then, rinse in the opposite direction or back to the starting point.

B. Wash vertical-post insulators from the pole-top bracket, up the insulator approximately 1/3 of its length and rinse back to the base. Wash 2/3 up the post and rinse back. Wash up to the conductor clamp and rinse back down its entire length.

C. Wash according to the following types of construction:

- For *tri-post construction*, wash the downwind horizontal post, the vertical post, and the upwind horizontal post.
- For *vertical construction*, begin washing at the lowest insulator and progress up one level at a time.
- For *delta construction*, change the sequence depending on the insulator orientation, nozzle position, and wind direction. (See Figure 5.6.5.)

D. Refer to **Section 6.5.1.B, Semi-Conductive Glaze (or Resistive Glaze/RG) Insulators** for instructions on washing RG insulators.

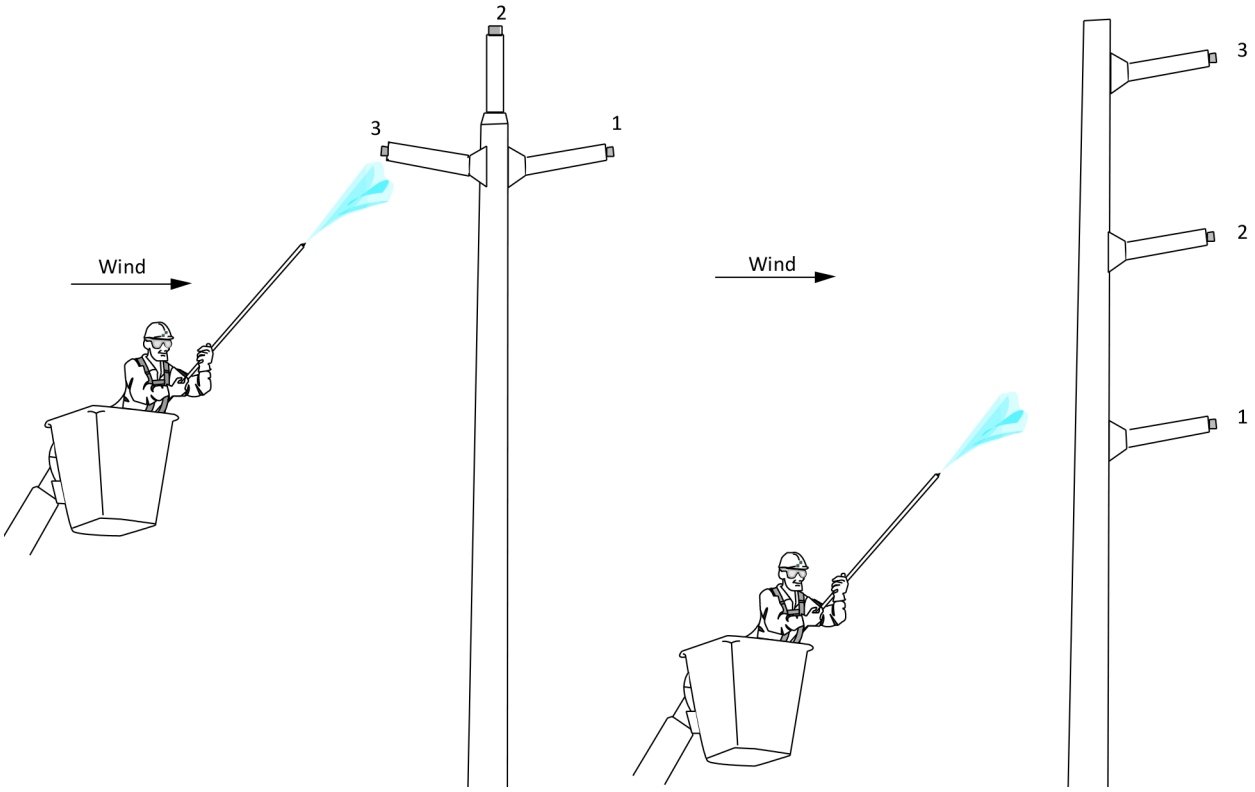

Figure 5.6.5. Washing Post-Type Insulators.

5.6.6 PIN-TYPE INSULATOR WASHING

A. Wash pin-type insulators using the same method as for washing a single-suspension, insulator unit as described in **Section 5.6.1, Suspension Insulator Washing (Vertical)**. Position the nozzle below the pin level and direct the water stream at a 30° to 40° angle toward the pin or "cold" end to create a swirling action. Wash each inside skirt. Then, wash the outside skirts. Continue washing up to the top surface and conductor attachment. Finally, rinse back to the pin, swirling the skirt surface.

B. If possible, position the nozzle upwind of the insulators to be washed. First, wash the most downwind insulator. If possible, avoid wetting the crossarm while washing the upwind insulators in succession. If excessive arcing occurs, direct the stream into the arc while continuing to wash. (See Figure 5.6.6.)

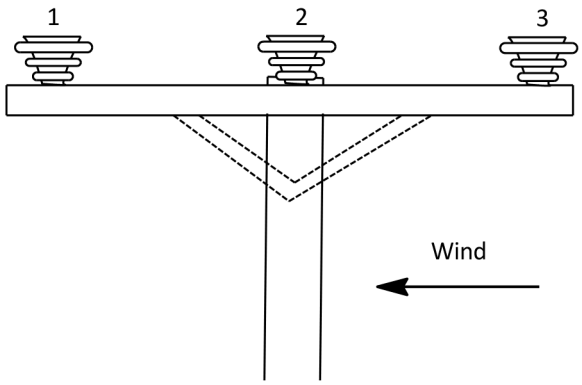

Figure 5.6.6. Washing Pin-Type Insulators.

5.7 WASHING NEAR OR INSIDE A SUBSTATION

When washing transmission line structures near or inside a substation, consider the following.

A. Avoid positioning equipment in relation to wind direction in such a way that there is an overspray that could cause a flashover of substation equipment.

B. When washing insulators on the first structure outside a substation, especially if short gateway spans are involved, do not allow the water to run down the conductor to the substation.

©PG&E revised January 2015

⚠WARNING

Wash water on the conductor can drip on the substation equipment and insulators, and if contaminated, cause a flashover.

C. When washing near a substation with heavy contamination on the substation insulators or equipment insulation, notify the substation maintenance supervisor.

D. Before washing insulators near a substation, the transmission line wash crew supervisor must:

- Hold a coordination meeting with the substation wash crew supervisor to discuss any abnormal conditions, procedures to be used, and specific insulators to be washed. (See **Section 2, Safety**, and **Section 6, Substation Washing Requirements and Techniques.**)
- Hold a joint tailboard with all wash crew employees.
- Report the washing start and completion time to the electric control center with jurisdiction for the line and/or equipment being washed. This must be done even when working under the jurisdiction for the substation wash crew supervisor.

5.8 DISTRIBUTION UNDER-BUILT WASHING

Wash transmission lines simultaneously with distribution under-built lines located on transmission line structures.

Follow the washing techniques in **Section 4, Distribution Line Washing Requirements and Techniques,** when washing distribution underbuilt lines.

5.9 POLYMER INSULATORS

A. Polymer insulators do not normally require washing. Only wash polymer insulators that have rubber sheds vulcanized to the internal fiberglass rod, after determining that washing will not damage the insulators. If washing is necessary, direct the water stream toward the top or outside surface of the shed to reduce the possibility of damage.

B. Never wash Ohio Brass "Hi* Lite" polymer insulators because they use O-rings to seal the individual sheds. Note the splice between the sheds. Contact ***Transmission and Distribution (T&D) Engineering*** for assistance to determine the insulator type. (See Figure 5.9.)

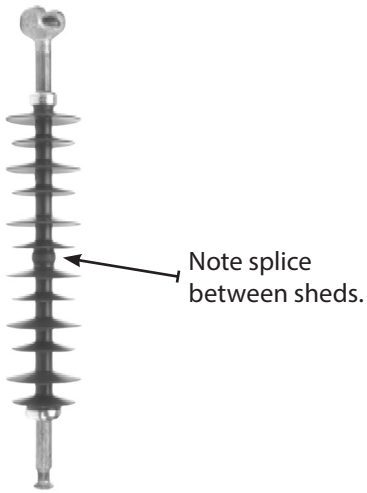

Figure 5.9. Ohio Brass Hi*Lite Suspension Insulators.

C. Polymer (or nonceramic) insulators may be washed with the same method as porcelain with the following exceptions:

- The nozzle tip to insulator surface shall be **more than ten feet.**
- The water stream **shall be aimed at the top surface** of the sheds. The water stream **shall not** be directed at the underneath side of the shed.
- The water stream **shall not** be held constant on the surface of the polymer insulator for any length of time. It must maintain a steady continuous motion.

D. The level of contamination observed prior to washing must be considered when determining if the polymer insulator can be washed. **Light to moderate** levels of bird contaminants covering 50% of the overall length of the insulator **may** be washed. **Heavy** levels of bird contaminants (caking or layering) should not be washed under energized conditions. Bird excrement becomes highly conductive when exposed to moisture. The hot and cold end compression fittings may be damaged, as well as the polymer sheds, requiring full replacement when tracking or arcing is observed. When heavy excrement is present, de-energized and grounded hand washing should be planned, or replacement should be considered.

©PG&E revised January 2015

5.10 SILICONE COATING

Contaminated insulators that have been coated with silicone grease should not be coated with a fresh application of grease over the existing contaminated layer. The contaminated grease must be removed prior to coating a new layer. If the line can be de-energized, the insulators can be hand wiped. If the line is to remain energized, consider using the dry wash method.

⚠WARNING

Do not wash insulators that have been coated with silicone grease.

5.11 AERIAL LIFT TRUCK

An aerial lift (AL) truck is commonly used with the wash trailer when washing insulators. An AL truck can also be used with a compressor when dry cleaning insulators.
See **Section 11, Vehicles, Equipment and Tools** for specific instructions for inspection, maintenance and operation of the vehicles and equipment.

5.11.1 POSITIONING FOR WOOD POLE LINES

A. For cleaning wood-pole, transmission-line insulators, position the AL truck parallel to and approximately ten feet from the structure.

B. The height of the structure determines the location of the AL truck. If the structure height is 50 feet to the top of the uppermost insulator, position the vehicle with the elbow of the boom adjacent to the pole, and use only the upper boom section to reach the washing position. When the pole, including the attachments, exceeds 55 feet in height, position the truck with the turret adjacent to the pole. Lower the outriggers and use both boom sections.

C. If possible, position the truck parallel to the line and in the direction of traffic. Position the lift bucket upwind of the insulators to be washed, while maintaining safe working and stream-length distances. Always use proper washing techniques.

5.12 AERIAL WASH TRUCK (PRODUCTION WASHER)

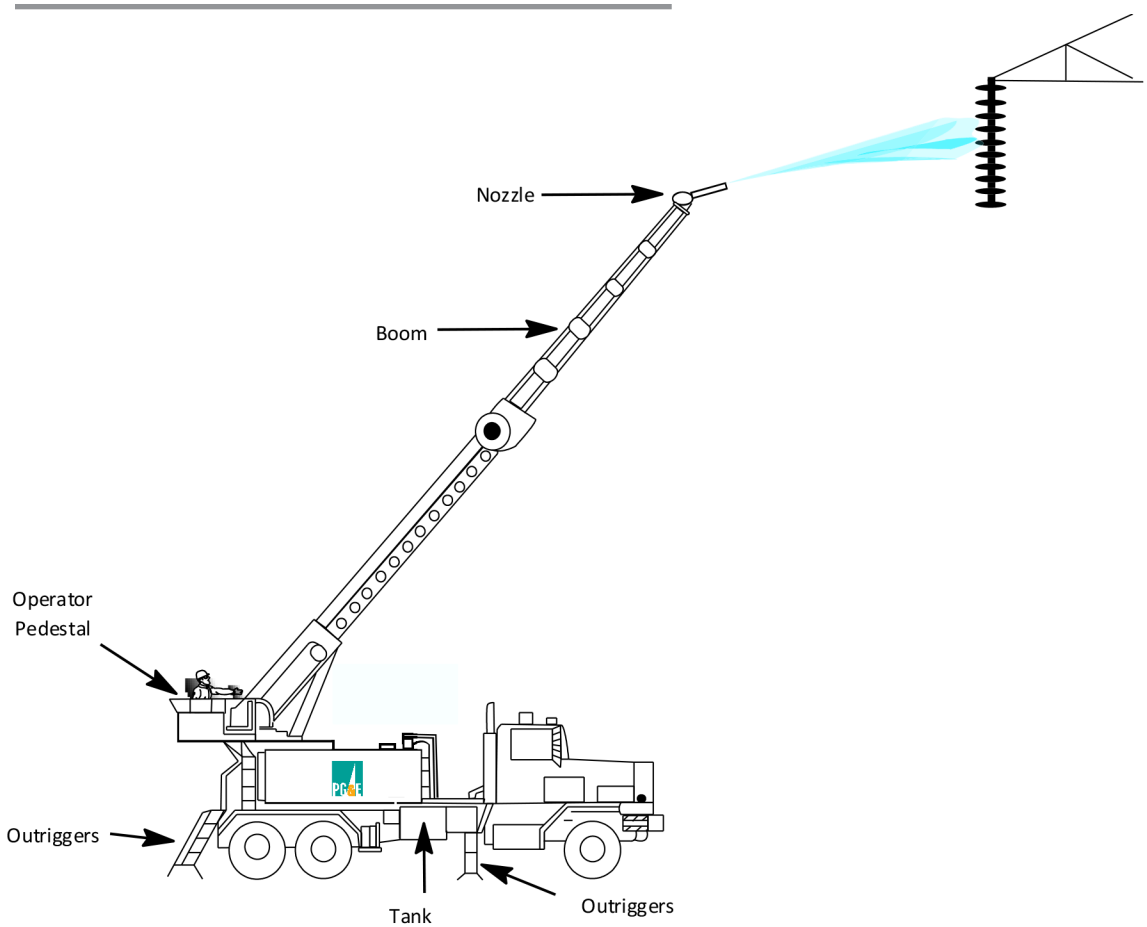

Figure 5.12. Production Washer Operation.

A. The production washer can be used on all voltages and is the preferred method when washing 500 kV suspension structures. Use the production washer for high production washing of insulators on energized lines under demanding conditions.

B. The truck is equipped with a hydraulically controlled, high-pressure nozzle at the end of a telescoping boom. One truck reaches to 80 feet and the other truck has a reach of up to 140 feet. (See **Section 11, Vehicles, Equipment, and Tools**, for specifications.)

C. The truck is diesel-powered and has a **2,000-gallon, stainless tank** mounted on the frame. (See Figure 5.12.)

⚠ WARNING

The aerial wash truck will exceed California weight limits if the 2,000-gallon tank is full. For public road travel, limit the water load to approximately 1,600 gallons for the Altec HW80 wash truck and 800 gallons for the Altec HW145.

©PG&E revised January 2015

5.12.1 REQUIREMENTS FOR USING THE PRODUCTION WASHER

Before starting insulator washing, the vehicle and boom operators must:

A. Be completely trained and familiar with this manual.

B. Perform a daily truck and wash component inspection.

C. Check the level and resistance of the water in the tank. (See **Section 11.3, Daily Inspection**.)

D. Report any problems or concerns to the supervisor.

E. Drive slowly when traveling off the road to prevent damage to the boom.

F. Attend a tailboard to discuss:

- **Section 2, Safety** — stressing the importance of maintaining the minimum stream-length and working distances while washing.
- Positioning and setting up the production washer.
- Operating the boom and nozzle.
- Cleaning techniques to be used.

5.12.2 PRODUCTION WASHER SET-UP

A. After positioning the truck for washing, set the outriggers before moving the boom. Use a level indicator to measure the slopes. Do not use the truck on slopes or grades over 12°. If the slope is over 12°, reposition the truck to a location where the slope is 12° or less. Then, set the outriggers (front or rear, left or right) to level the truck. Use the uphill outriggers to stabilize the truck and take the load off the truck's uphill suspension.

⚠ WARNING

The truck should be level when operating. Use outrigger pads and cribbing on a firm surface to level the truck. Do not use outriggers to raise the truck tires off the ground when parked on a slope.

B. Sound the alarm to warn the ground employees that outriggers are being lowered or raised. To reposition the truck, retract the boom and stow it in the boom storage cradle. Raise the outriggers to the fully-stowed position. Raise the outriggers in the opposite order to which they were lowered. Always raise the outriggers carefully to avoid severely hitting the stowed position stops.

5.12.3 PRODUCTION WASHER POSITIONING

Consider the following factors before positioning the production washer for washing:

- Height of the structure or pole.
- Route of the transmission line; e.g., which side of the road the line is on, the traffic direction, etc.
- Wind speed and direction.
- Types of insulators and their configuration.
- Degree of contamination.

A. Positioning for 500 kV Structures

1. For a 500 kV suspension structure, back the production washer to a position approximately 20 feet away from the structure on the upwind side. Position the boom operator's chair directly under the center phase or slightly to the upwind side, if a crosswind is involved. (See Figure 5.12.3.) Position the truck approximately 30° toward the passenger side of the line to allow all three phases to be washed without hitting the boom rotation stop. This is located at the seven o'clock position on the boom turret.

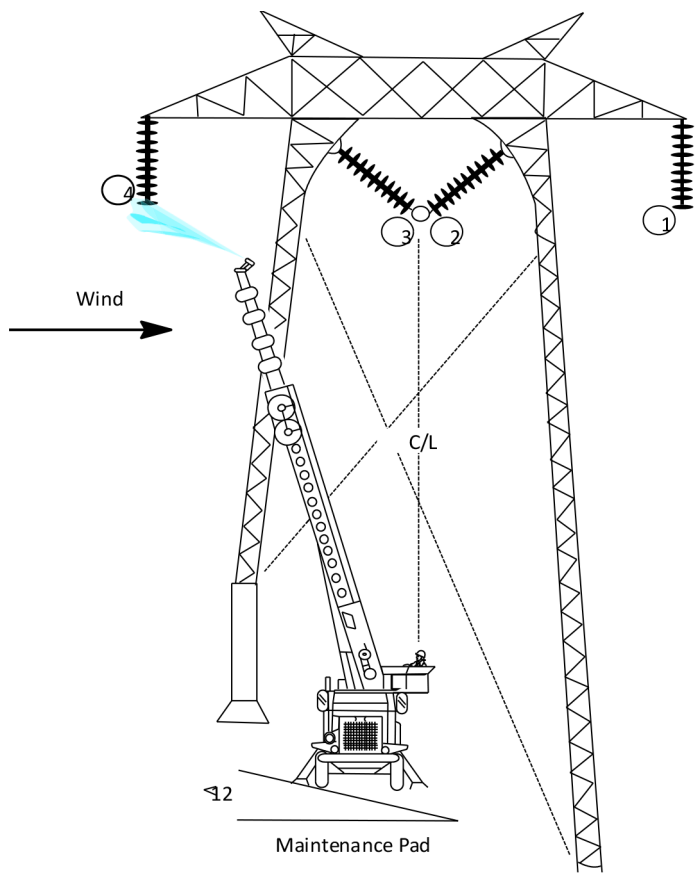

Figure 5.12.3. Production Washer Position and Sequence for 500 kV Structures.

©PG&E revised January 2015

2. For a 500 kV dead-end structure, position the truck similar to the way it would be for washing a 500 kV suspension structure, but on the downwind side of the insulator. After washing the downwind side of the insulator, reposition the truck to the upwind side of the insulator and wash the remaining dead-end or jumper support insulators.

B Positioning for 115 kV and 230 kV Structures

1. In general, 115 kV and 230 kV double-circuit towers are not as tall as 500 kV structures. Position the production washer on the upwind side, directly in line between the two circuits, with the cab facing the structure. Cradle and retract the nozzle. Then, position the truck approximately ten feet from the insulator to easily raise and lower the boom without contacting the insulator.
2. For 115 kV and 230 kV dead-end structures, first position the truck between the circuits on the downwind side of the structure. Then reposition the truck on the upwind side to wash the remaining dead-end or jumper support insulators.
3. Depending on the conditions, alternately position the truck on the downwind side of the double structure with the wind across the line and wash all insulators on one circuit. Then, move the truck to the opposite side and wash the upwind circuit insulators. Under minimum wind conditions, if possible wash both circuits, from the in-line position (between the circuits). Start by washing the downwind circuit or dead-ends. Do not exceed the minimum working distance allowed from the upwind circuit.

5.12.4 BOOM AND NOZZLE OPERATIONS

A. Check the position of the boom-speed handle and the approximate water level before operating the boom.

B. Use the foot pedals and joysticks located on the armrests of the operator seat to control the nozzle, water, and boom as follows:

- **Left joystick** Raises, lowers, and rotates the boom.
- **Right joystick** Raises, lowers, and rotates the nozzle.
- **Left foot pedal** Extends and retracts the boom.
- **Right foot pedal** Turns the water on and off.

C. Plan the location of the boom and nozzle before extending the boom to the washing position. Position the nozzle for washing at 90° to the side of the boom and slightly below the conductor level. This position allows adequate viewing and effective washing. (See Figure 5.12.4.)

D. Raise the boom to the proper angle and rotation position. Extend the boom to the desired wash height. A red warning light indicates that the boom is out of its support.

E. The qualified observer should stand in view of the boom operator, with adequate view of the relative distance of the boom to energized equipment. The observer should assist the boom operator in determining the boom and nozzle position for the required stream-length distance. Add a second observer to adequately watch all obstructions if the visual site is impaired or there is congestion.

F. Release a short burst of water while extending the boom out as a test to determine nozzle height and wind direction, and to remove any heated water from the water pump and/or hose system.

⚠WARNING

Never position the boom closer than the minimum approach and working distance.

G. When the boom is fully extended, as the water is pumped through the nozzle, the booms deflects approximately two feet in the opposite direction from which the nozzle is pointing. If the deflection from the water stream operation exceeds two feet, the boom should be adjusted by tightening the rollers on the side of the boom. (Do not extend the boom horizontally more than 70 feet without additional support.) The observer and truck driver must keep all employees away from the truck while washing is in progress. Employees not wearing EH footwear must stay 50 feet away from all vehicles.

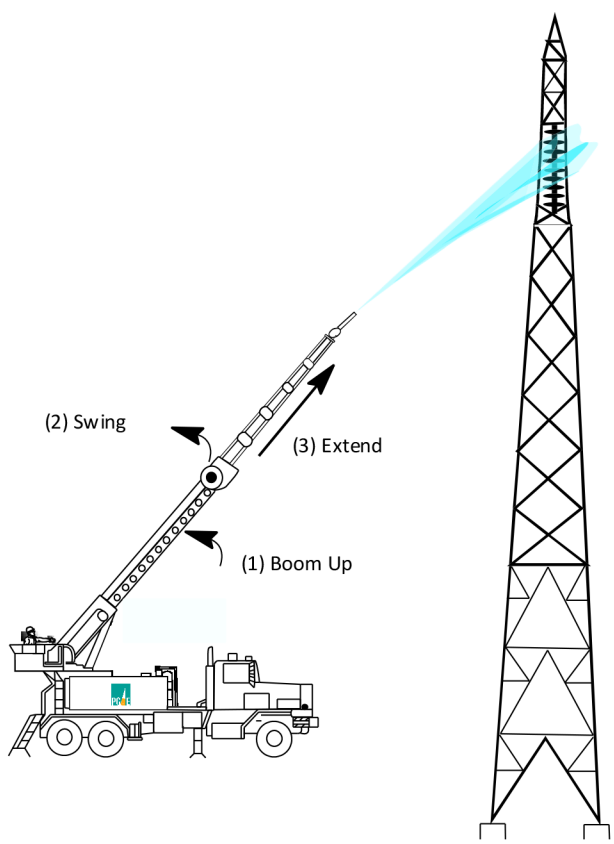

Figure 5.12.4. Positioning the Boom.

©PG&E revised January 2015

H. While operating the boom, avoid unnecessary boom whip or shuttle. This occurs when:

- The water is cycled on or off too frequently.
- The boom is raised or lowered too quickly.
- The boom is rotated to the left or right without stopping in-between. This usually occurs when the boom is extended.

To avoid whip or shuttle while moving the boom, retract the boom to less than 70 feet. Move the boom to the desired position. Extend the boom to the washing position. This can be an effective procedure, depending on the sensitivity of the controls and the operator's skills at using them. If this is impractical, move the boom-speed handle to the low-speed position and operate the boom slowly. (See Figure 5.12.4.) The boom and nozzle speed and reaction times are fully adjustable. On the HW145, the boom speed of rotation and elevation are cut in half when the boom extension is at 50%.

I. Be alert for any problems that might arise while positioning the boom. Immediately correct any issues with the nozzle control or stream break-up. Report equipment or line problems to the transmission line supervisor as soon as is practical.

5.12.5 SCHEDULING THE PRODUCTION WASHER BETWEEN AREAS

A. The transmission line supervisor in the area where the production washer is based is the contact for scheduling the production washer for routine and emergency insulator washing. For routine and emergency requests, the requesting transmission line supervisor (or designee) will:

1. Contact the switching center having jurisdiction over the lines being washed and provide the following information:

   - Line to be washed.
   - Structure numbers to be washed.
   - Date and time of the wash.
   - Type of wash to be performed.
   - Name of the emergency contact person.

2. Provide the aerial-wash truck crew with the following information:

   - Assembly point.
   - List of emergency telephone numbers.
   - List of frequencies and call numbers for the switching center.
   - List of frequencies and call numbers for the local transmission line supervisor and wash crew.
   - Water sources that meet the required ohmic value.
   - Name of a qualified and trained boom operator or guide who is familiar with the area and access routes to the structures.
   - Means of transportation for the aerial-wash truck crew.
   - Meals and lodging as required.
   - Accounting numbers.

B. The transmission line supervisor contacted will provide:

- A fully operational, aerial-wash truck.
- A qualified and trained equipment operator and boom operator, if needed.
- Credit card for fuel and directions to any in-route, Company service centers.
- Maps showing the travel route and destination.
- Names of contact persons at the destination.
- Outside phone numbers of the destination headquarters and the requesting transmission line supervisor (or designee), in case of emergency.
- Cash advance for in-route or layover expenses, if needed.
- Information to the requesting transmission line supervisor, including the time that the production washer departed, the route of travel, and the estimated arrival time.

C. The production washer crew will track the circuits and structures washed, and inform the requesting transmission line supervisor of any missed circuits and structures.

©PG&E revised January 2015

5.13 CLIMBING WASH TECHNIQUES

Use the climbing method to wash insulators on energized lines and equipment on voltages up to and including 500 kV. This is an effective method when insulators cannot be cleaned using an aerial lift truck, production washer, or helicopter.

5.13.1 STEEL STRUCTURE RIGGING AND PROCEDURES

On steel structures, wash insulators from inside the cage or from the face side of the tower. Use the steel members of the structure as shields by not allowing the nozzle to project beyond the plane of the tower.

⚠WARNING

Always ground the wash gun to the steel structure.

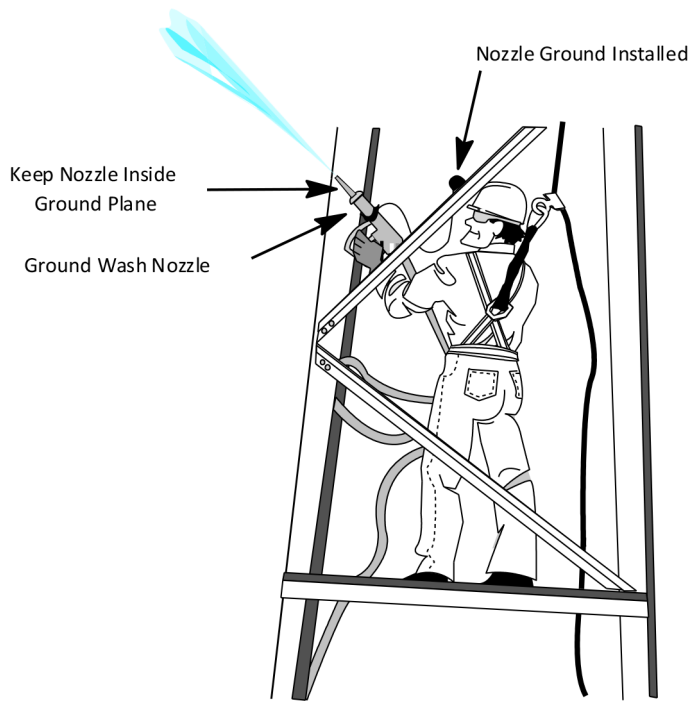

Figure 5.13.1. Washing Position on Steel Structure.

A. 115 kV and 230 kV Structures

1. When climbing a tower to wash insulators, first carry a 150-foot length of 1/4-inch synthetic rope up the outside of the tower and pass it down through the inside of the tower to pull up the handline. If possible, pull all lines, hoses, and rigging up through the inside of the tower. Use this equipment to ensure proper working distance and protect the hose in case of a flashover.

2. Attach a rope bridle to the rubber hose near the wash gun for lifting and assisting the wash gun operations. The length of the hose between the wash gun and the rope bridle will vary, depending on the type and location of the structure. This length must be long enough to effectively wash the insulators.
3. With the handline block rigged at the top-insulator level to be washed, lift the water hose with the bridle and the wash gun. The ground should be attached to the lowest-level insulator to be washed. With the ground attached, raise the wash gun and hose while washing the higher-insulator levels.

B. 500 kV Structures

1. When climb-washing 500 kV structures with the wash trailer, two nozzle operators are required to wash at the same time. They must be positioned with one on each leg, just above the internal guy plates. Both must attach the handlines just above the internal guy plate on the center-phase side of both tower legs to raise the equipment. The downwind operator should wash the downwind-phase, insulator string first. Then, both should wash the center-phase insulators at the same time and pace. The upwind operator should complete the sequence by washing the upwind-insulator string.
2. Always wear conductive footwear while washing 500 kV insulators.

5.13.2 WOOD STRUCTURE RIGGING AND PROCEDURES

A. Carry a handline up and attach it to the pole just above the washing position. Install a pole band around the pole just below where the nozzle operator's feet will be when in the washing position. Attach a long ground lead from the ground rod to the pole band.

B. Attach a rope bridle to the hose near the wash gun for lifting and assisting the nozzle operator using the gun. Send up and tie off the wash gun and hose at the desired position. Attach a ground shunt from the wash gun to the pole band.

5.14 DRY CLEANING TECHNIQUES

See **Section 8, Dry Cleaning Requirements and Techniques,** for equipment specifications and techniques.

©PG&E revised January 2015